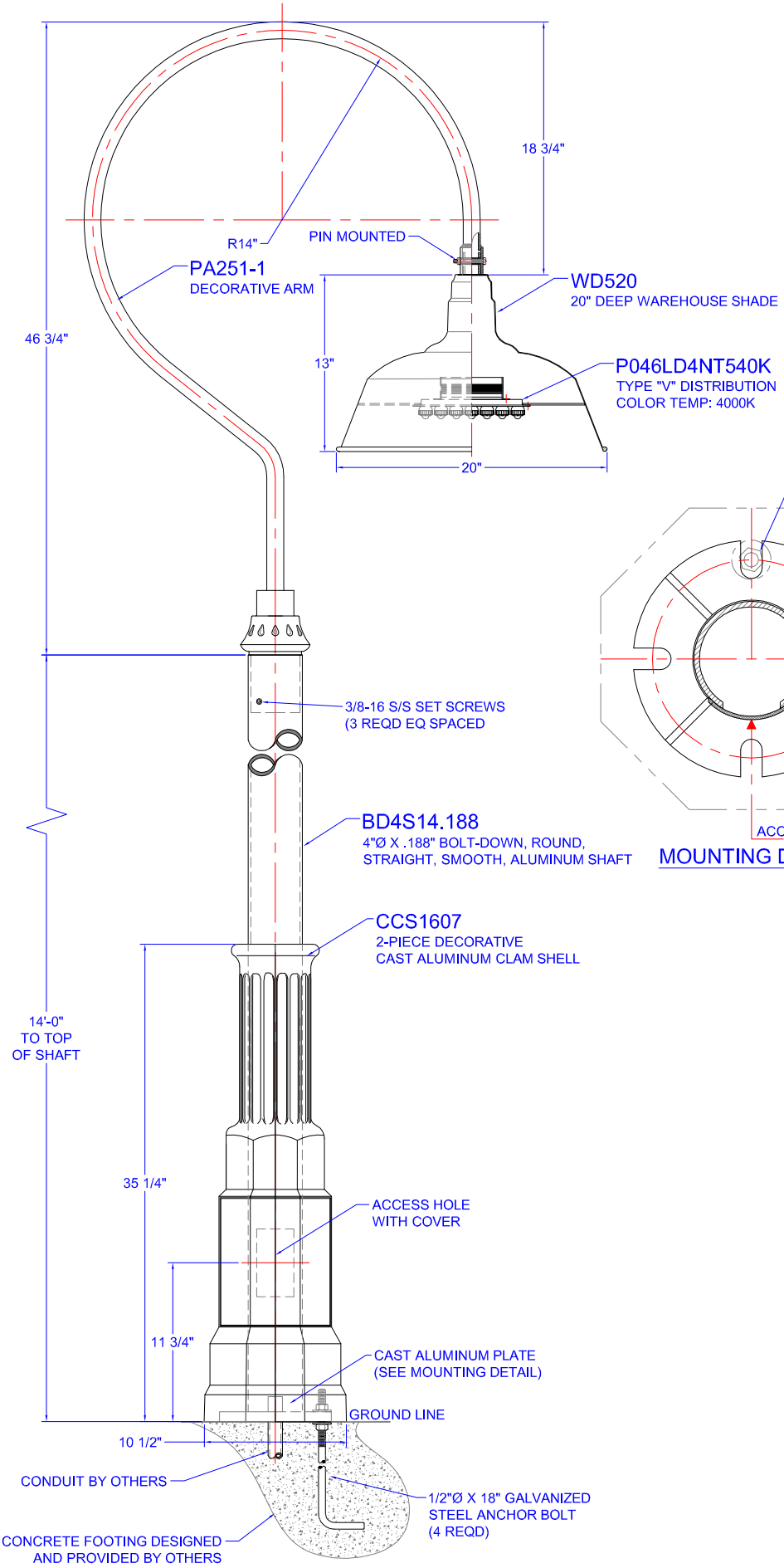

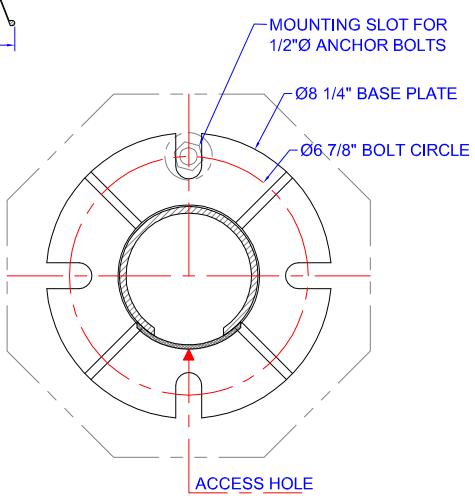

MOUNTING DETAIL

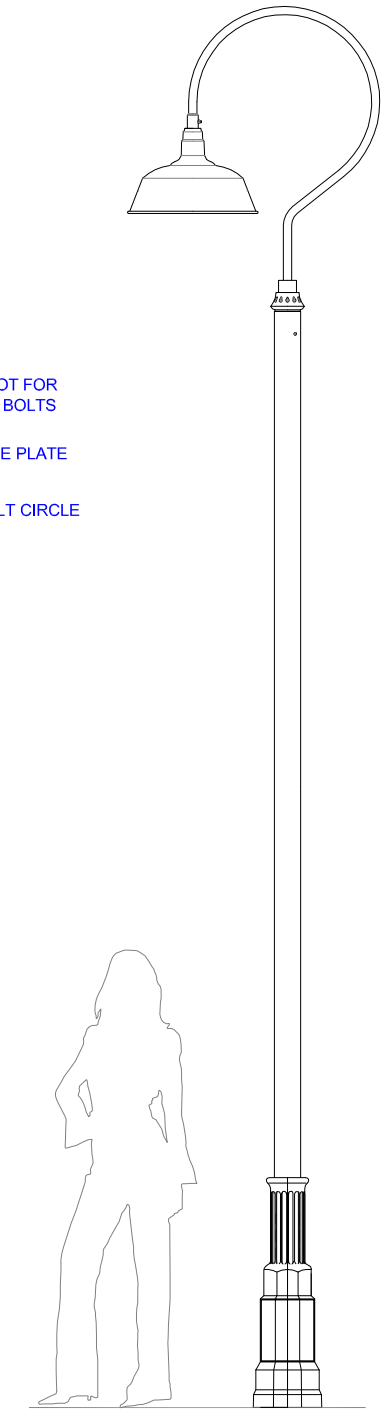

PROPORTIONAL VIEW *UL LISTED